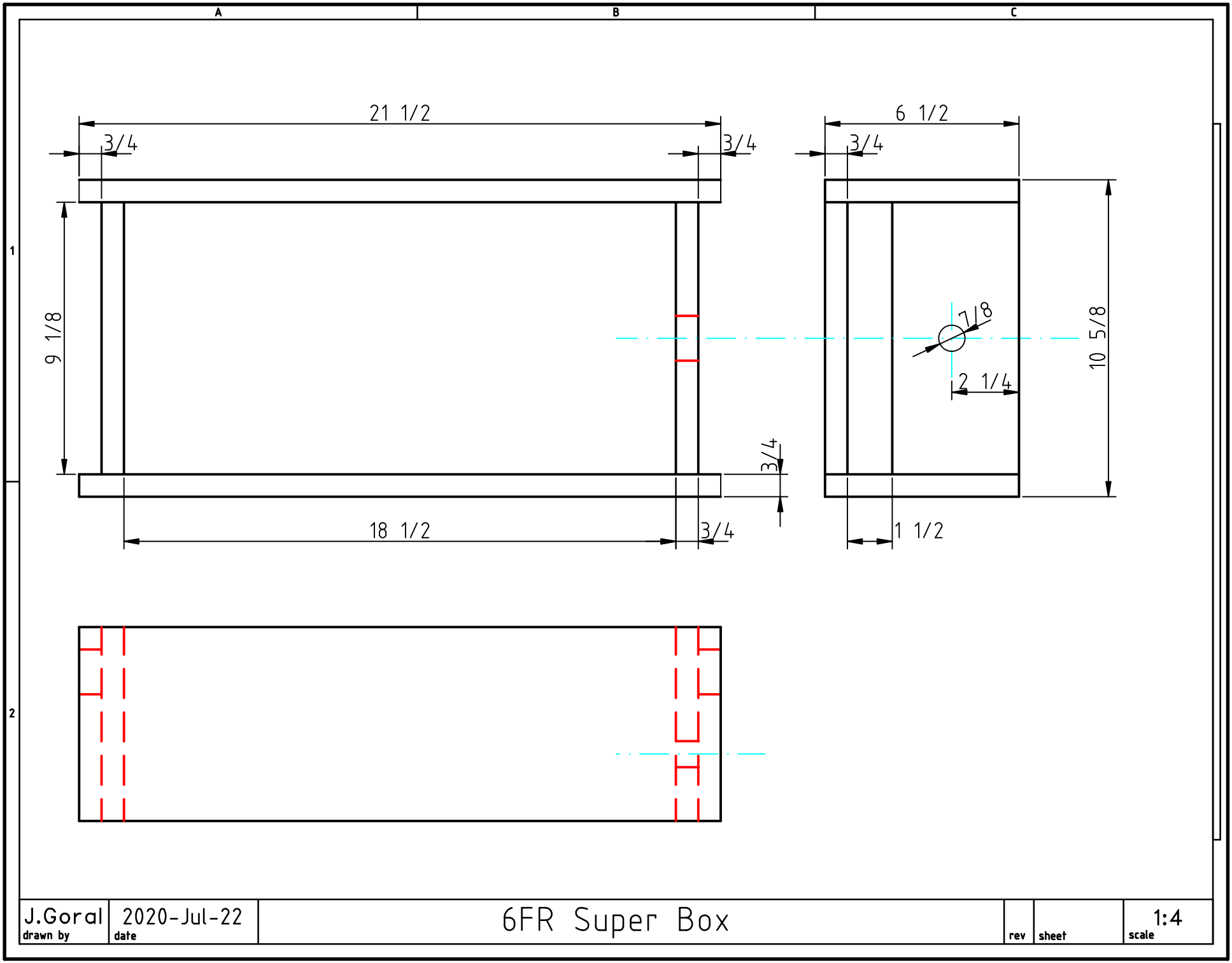
A
B
C
1
2
21 1/2
3/4
3/4
9 1/8
18 1/2
3/4
3/4
6 1/2
3/4
7/8
2 1/4
10 5/8
1 1/2
J.Goral
drawn by
2020-Jul-22
date
6FR Super Box
rev
sheet
1:4
scale